Dynemech VIBRATION TECHNOLOGY

SPRING ISOLATOR SERIES : RBD

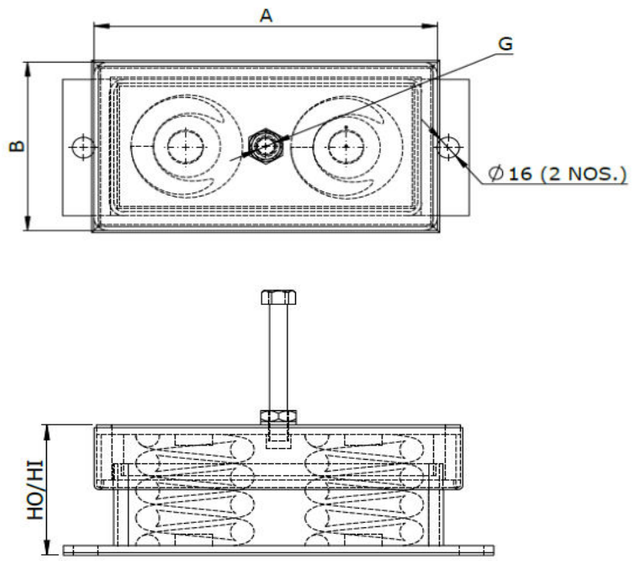

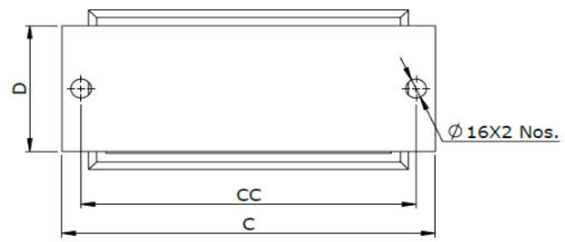

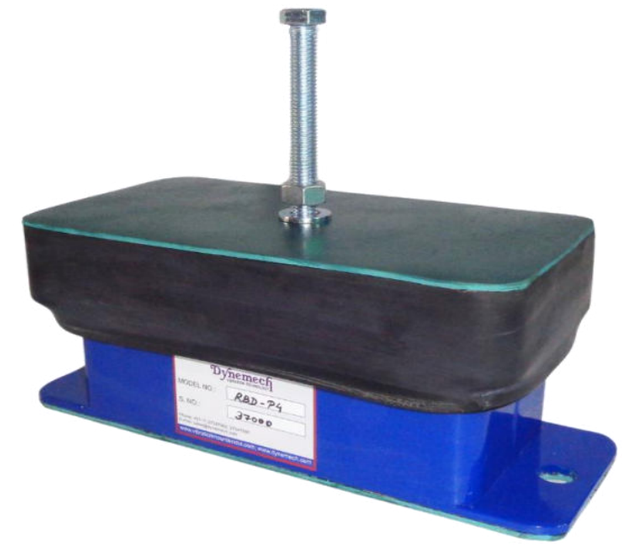

S. NO.	MODEL	Load (Kg)	Free Height (H)	Bolt Size	Top Plate (AxB) (mm)	Bottom Plate (CxD) (mm)	CC (mm)	Natural Frequency range (Hz)
1	RBD-E2-M12x1.75x100	64	112	M12	232X127	271X96	241	3.5-11
2	RBD-F2-M12x1.75x100	20-120	112	M12	232X127	271X96	241	03-08
3	RBD-F5-M12x1.75x100	122	112	M12	232X127	271X96	241	3.5-11
4	RBD-G1-M12x1.75x100	220	112	M12	232X127	271X96	241	3.5-11
5	RBD-G5-M12x1.75x100	314	112	M12	232X127	271X96	241	3.5-11
6	RBD-H2-M12x1.75x100	50-400	112	M12	232X127	271X96	241	3.5-11
7	RBD-H5-M12x1.75x100	420	112	M12	232X127	271X96	241	3.5-11
8	RBD-J2-M12x1.75x100	60-580	112	M12	232X127	271X96	241	3.5-11
9	RBD-K3-M12x1.75x100	400-1700	80	M12	202X132	241X101	211	5.0-10
10	RBD-L3-M12x1.75x100	100-1000	112	M12	232X127	271X96	241	3.5-11
11	RBD-N5-M12x1.75x100	800-2400	112	M12	232X127	271X96	241	3.5-11
12	RBD-P3-M12x1.75x100	1000-2800	112	M12	232X127	271X96	241	5.0-09
13	RBD-P5-M12x1.75x100	500-1800	102	M12	252X137	297X112	261	5.0-09
14								